2.001.4

DOORS

fully glazed main entrance swinging door
opening outwards

EN762 PVC

ENERGATE
WWW.ENERGATE.COM

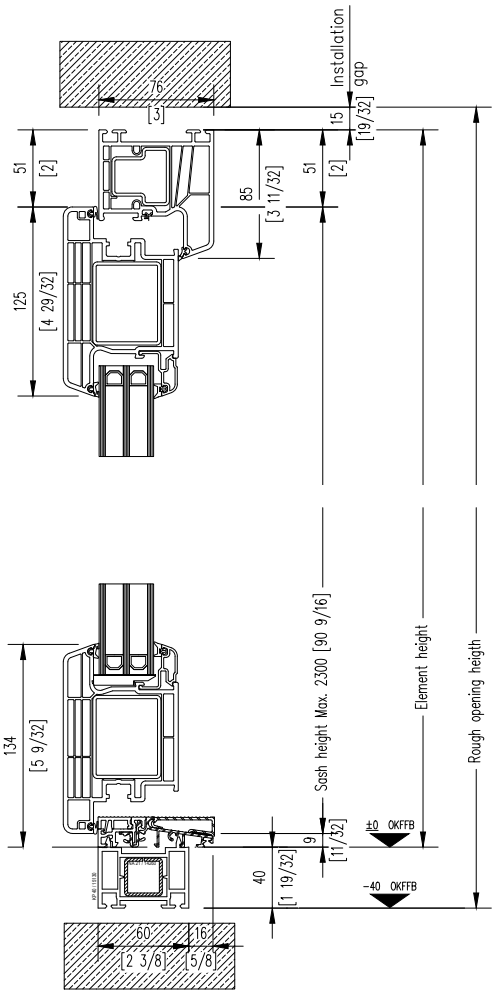

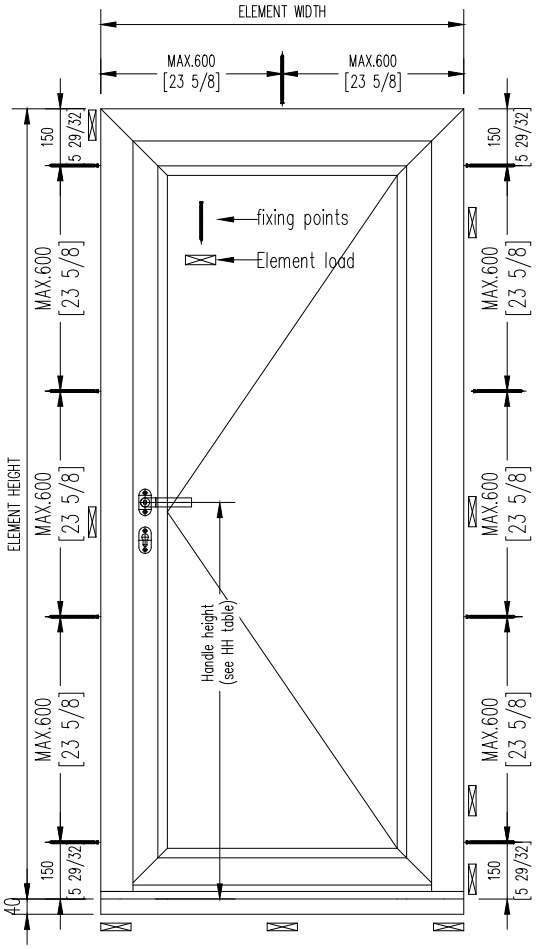
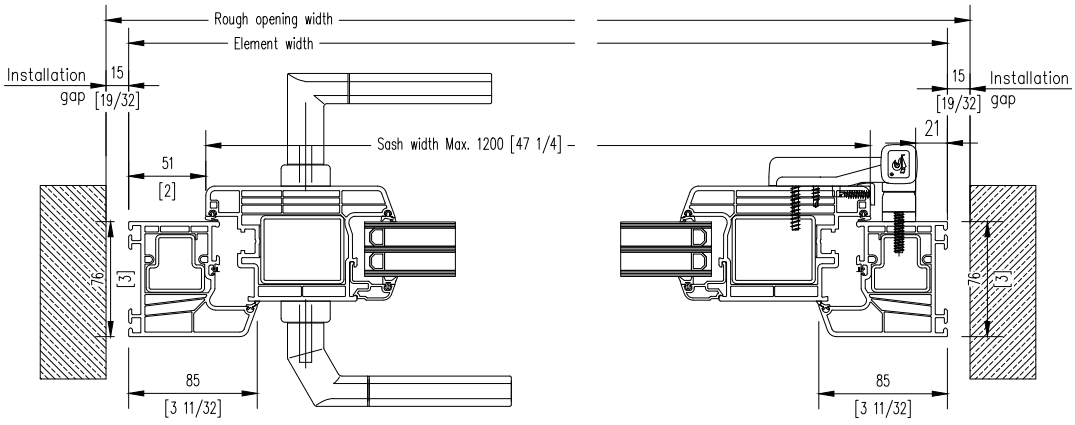
System:	ENERGATE 762
ENERGATE product type:	2.001.4
Security level:	Basic
Standard handle:	
Sash weight (max. kg)	140 kg
Miniumum & maximum measurements: Attention: Minimum and maximum dimensions can not be combined For exact information see ENERGATE size application diagram (separate page) Maximal sizes always deponed on weight are of the choosen glass. The glass weight is always noted on the product data sheet.	Information at the drawing.