1.104

PATIO DOORS with flat threshold

double french opening swinging door

EN843 PVC

ENERGATE
WWW.ENERGATE.COM

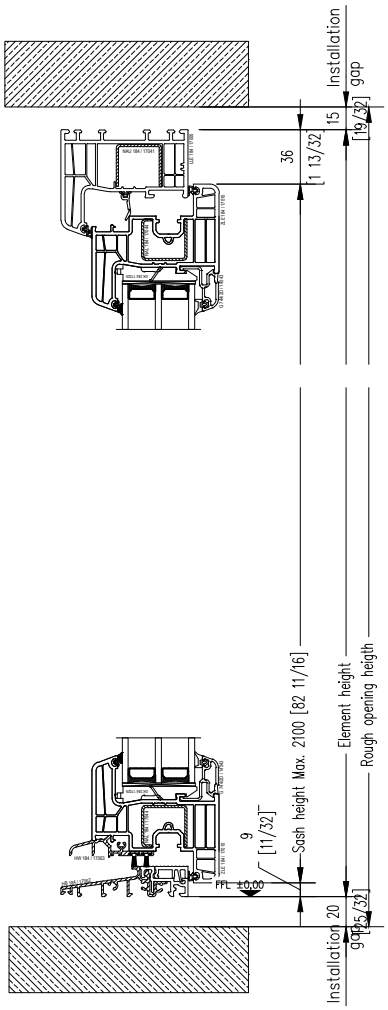

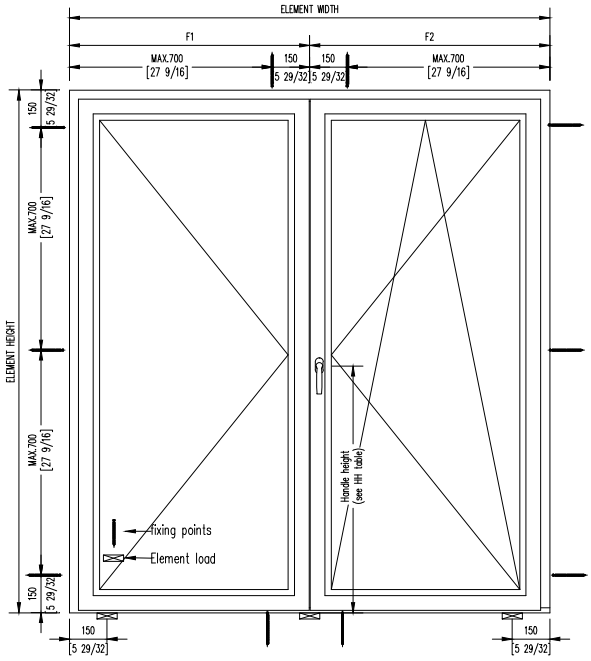
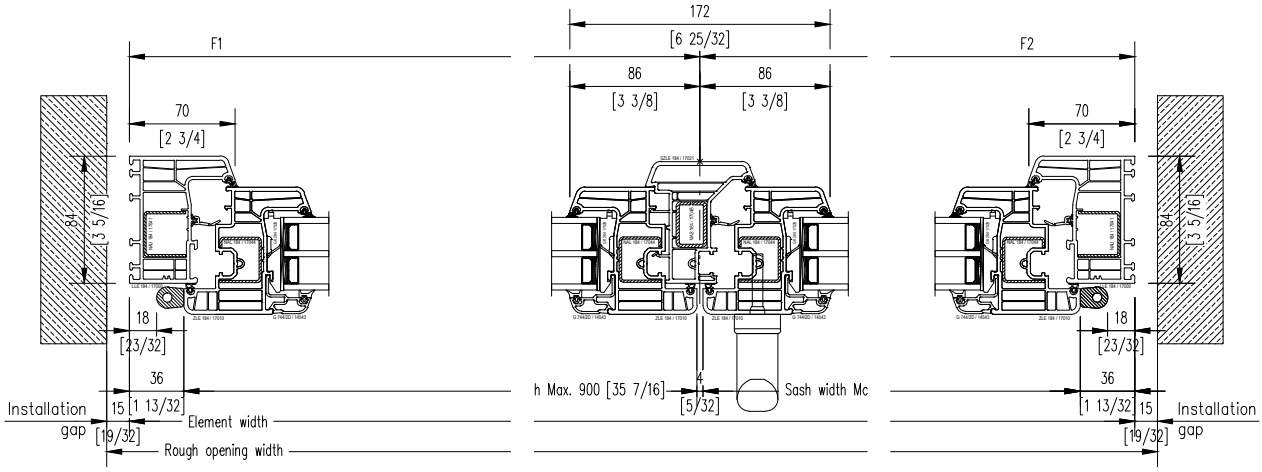
System:	ENERGATE 843
ENERGATE product type:	1.104
Security level:	Basic
Standard handle: Shaft length 7x7x35mm (17/64'' x 17/64'' x 1 3/8'') Screws M5 x 50mm (M5 x 1 31/32'')	Atlanta
Sash weight (max. kg)	100 kg
Miniumum & maximum measurements: Attention: Minimum and maximum dimensions can not be combined For exact information see ENERGATE size application diagram (separate page) Maximal sizes always deponed on weight are of the choosen glass. The glass weight is always noted on the product data sheet.	Information at the drawing.